Cot/Bed Sheet Layout
18mm Birch Ply

Bed Configuration

Cot Configuration

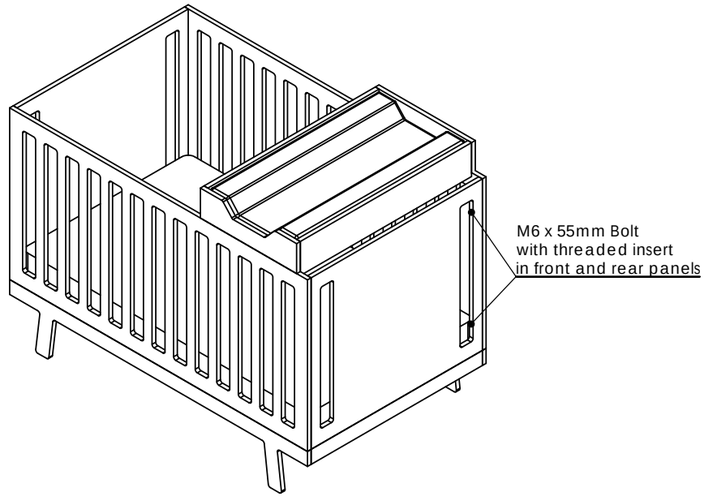

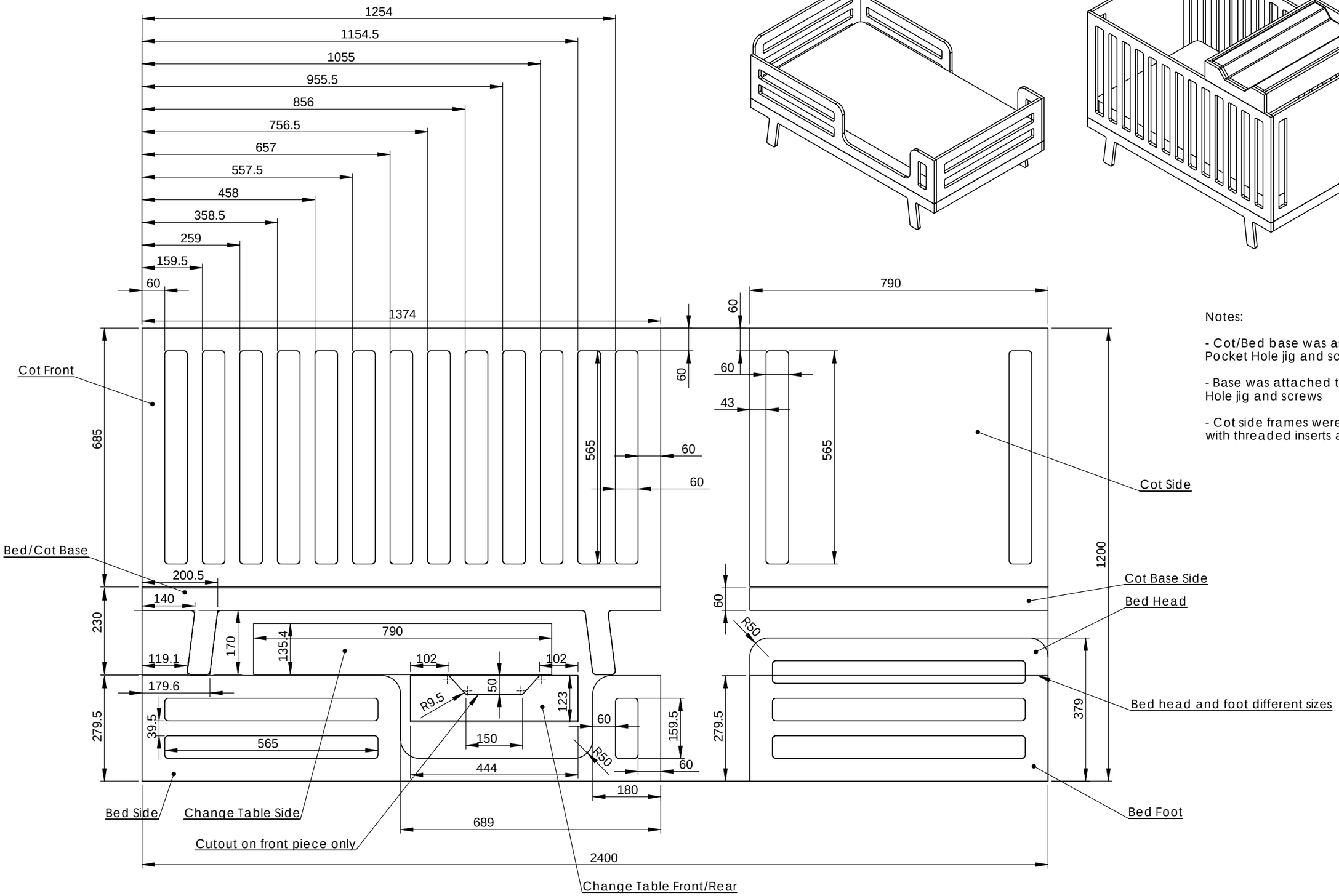

Notes:

- Cot/Bed base was assembled with Kreg Pocket Hole jig and screws

- Base was attached to cot with Kreg Pocket Hole jig and screws

- Cot side frames were attached to front/rear with threaded inserts and M6 x 55mm bolts